Explicit Congestion Notification - ECN
Birds of a Feather Session

Sally J. Floyd & K. K. Ramakrishnan
Lawrence Berkeley National Lab AT&T Labs. Research

41st IETF
Los Angeles, CA.
March 30, 1998.

Agenda

- Introductions and Agenda planning
- Current plan:
  - Introductory material - K. K. Ramakrishnan
  - Important details and issues related to cooperation - Sally Floyd
  - Security and issues related to IPSEC - Steve Bellovin
  - Experimental Results - report from UCLA
  - Other items?
  - Planning for the future

Proposal to add Explicit Congestion Notification

- TCP - the dominant transport protocol in the Internet
  - embodies a set of mechanisms for congestion control and avoidance
- Congestion is detected by packet loss
  - mechanisms exist to adapt to congestion while minimizing throughput degradation due to packet loss
    - » fast retransmit and fast recovery
- Depending on packet loss by queue overflow as congestion indication
  - builds up queueing delay; variability in delay
  - undesirable unfairness due to “tail drops”
  - synchronization of loss across multiple flows

AT&T

Random Early Detection

- Active queue management methods (RED)
  - can be used to maintain a smaller average queue
    - » reduces delay and its variability
- RED intended also to improve fairness and avoid synchronized losses due to “tail drops”
- RED mechanisms being actively considered for implementation
- But, *loss* is still the primary indication of congestion
- Philosophically:
  - desirable to separate policies of queueing (or dropping) packets at a router from policies for indicating congestion
  - some applications are sensitive to loss: audio/video; interactive traffic (telnet, web-browsing). Sensitivity may also be to latency for retransmisson.

AT&T

Explicit Congestion Notification

- Routers provide an indication of incipient congestion through marking of packets

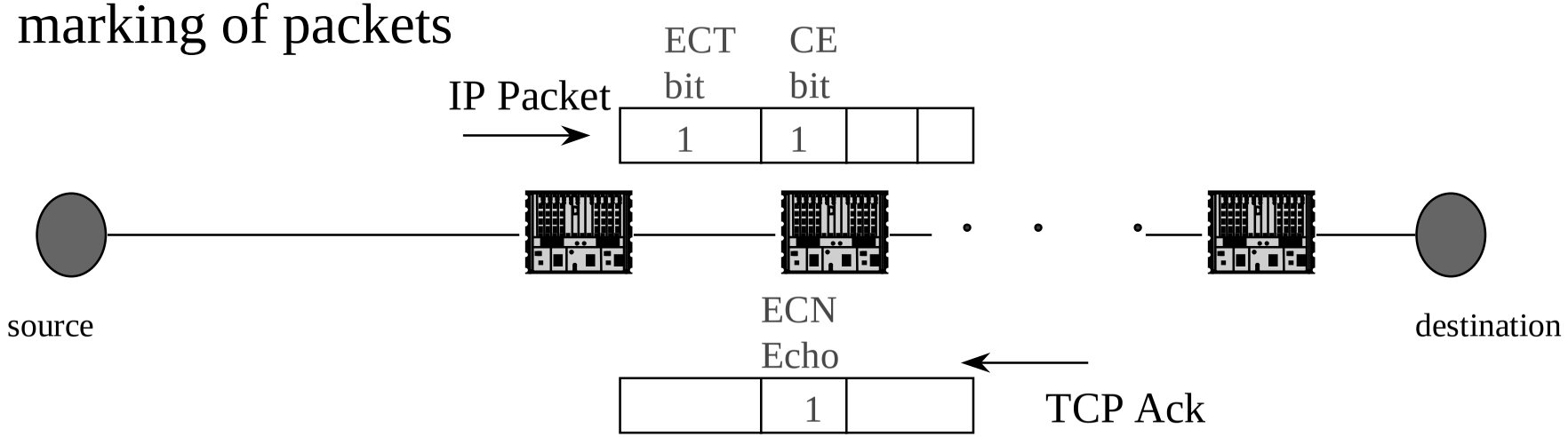

- Avoids packet losses
- When average queue size, using RED algorithms, exceeds a threshold, router *probabilistically* sets the Congestion Experienced (CE) bit
  - » expectation: packet losses would be infrequent

Router Actions

- Router computes exponential weighted average for queue length as specified for RED
- Following rules for RED marking, if average queue length exceeds threshold, router determines it is congested, packet is selected:
- if ECT (ECN Capable Transport) bit is set for packet, packet's CE bit is set probabilistically
  - if packet's ECT bit is *not* set, packet is dropped
- Under more severe congestion, router drops incoming packet
  - when queue is full, or average queue size exceeds an upper threshold
- A packet with its CE bit set: leave it unchanged

Transport Protocol Actions

- Source and destination TCPs exchange desire to use and/or capability to use ECN at connection setup
- If the entities agree
  - ECT bit is set on transmitted packets
  - Receiver would look at CE bit
- Originating packets have the CE bit clear
- When ECN-Echo bit in Ack. is received set
  - treat just as a congestion loss was detected
    - » halve congestion window & reduce “ssthresh”
    - » do not increase “cwnd” in response to Ack. if ECN-Echo bit set

AT&T

Transport Protocol Actions (contd…)

- Do not react to Explicit Congestion indication more than once every window of data

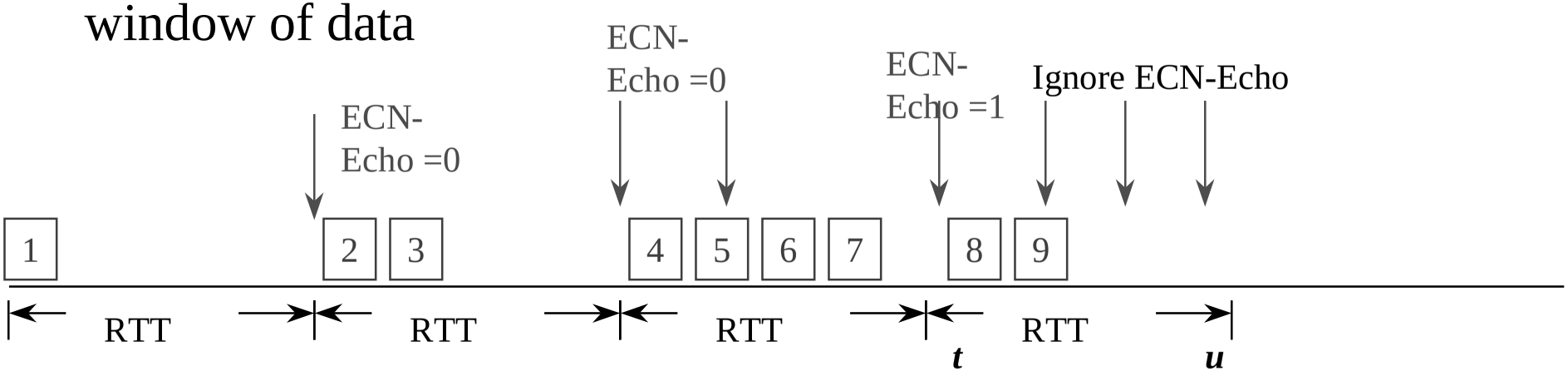

- At "*t*", source TCP reacts to ECN-Echo
  - note packets outstanding (sent, acks. awaited)
  - react to ECN-Echo only after those packets are acked at time "*u*"
- Also, during interval "*t*" to "*u*", do not reduce congestion window in response to duplicate acks.

TCP Receiver

- When TCP receives a packet with CE-bit set, set the ECN-Echo in returning Ack packet
- If Ack. Withholding implemented:
  - "OR" all CE bits of packets being acknowledged
- Generate duplicate Acks. as usual
- Congestion in the Ack. path is subject of further work

Applications that might benefit from ECN

- Very short web transfers: prefer to not have to wait for TCP's retransmit timer to expire
  - to detect loss of single packet in very short transfer
- Realtime flows with (fixed or adaptive) playback times
  - user would rather receive the packet
- Reliable multicast - where overhead costs of retransmitting dropped packets can be expensive
- Low bandwidth telnet connections
- Hopefully, future applications where congestion notification is useful - and prefer to not have packet dropped.

AT&T